Crested Butte, CO Light Rescue #1160

Chassis

Cab: Dodge Ram 5500 4x4 Crew Cab
Engine: 6.7 L I6 Cummins Turbo Diesel
Transmission: 6-Speed Auto Aisin HD
Wheelbase: 198"

Body

Material: Aluminum
Body Length: 12'
Overall Height: 8' – 7"
Overall Length: 26' – 1"

Features

70-Gal, G3 Fire Polypropylene Tank and Foam Cell
Power Pro Engine with Electric and Recoil Start
Foam Solution Dual-Action Spray Gun
Command Light KL Series Light Tower
Warn 12-Volt Electric, 15,000-lb. Capacity Winch
Zico 1000 Walkaway SCBA Air Pack Bracket(s)
OnScene Solutions LED Compartment Lighting
OnScene Solutions Heavy-Duty Cargo Slides
Slideout Aluminum Vertical Tool Boards
SVI Extreme Contoured Front Bumper

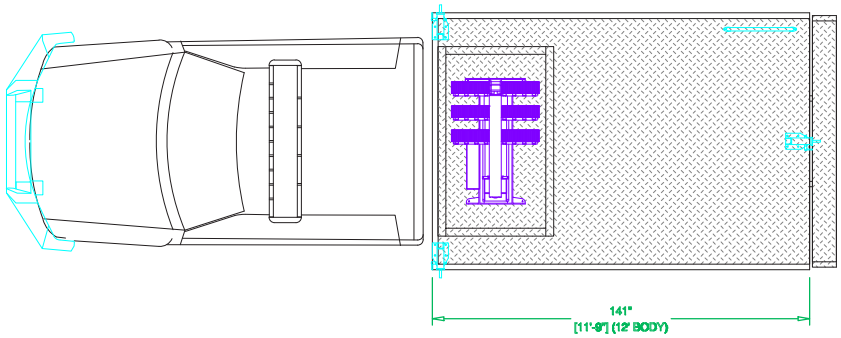

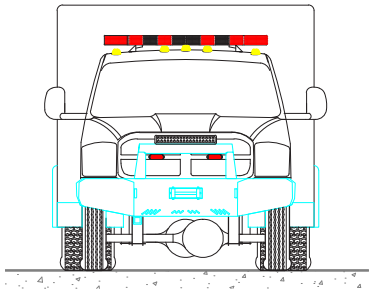

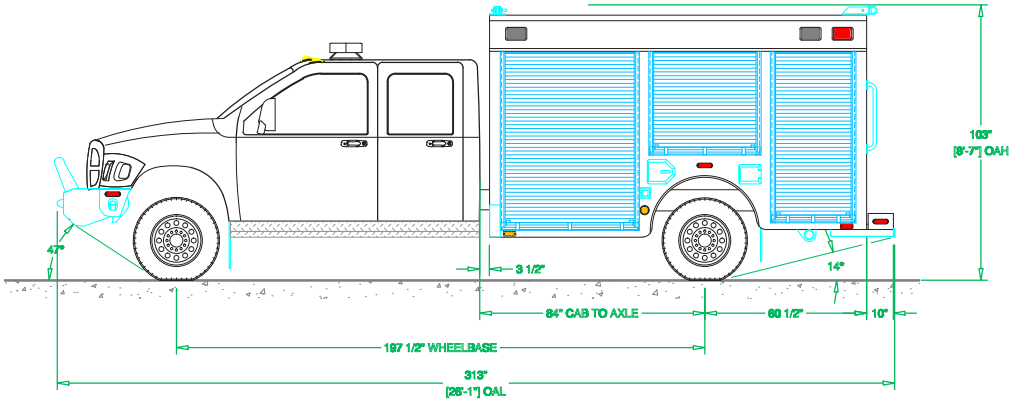

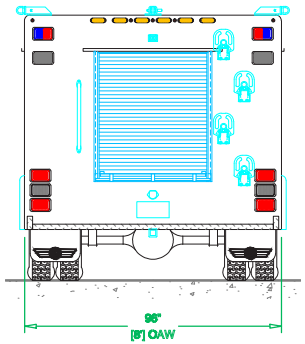

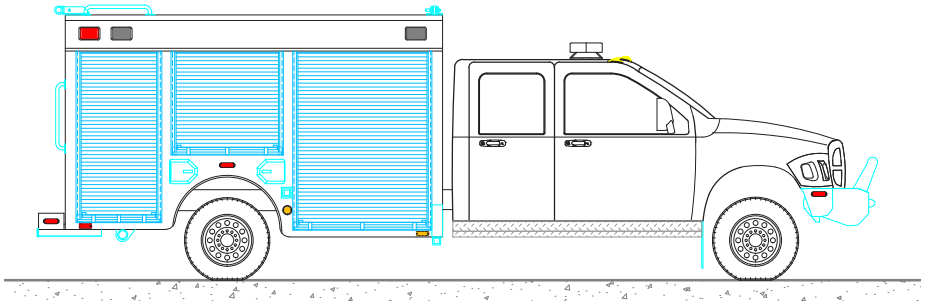

See more at svitrucks.com